sales@candelatech.com
support@candelatech.com
+1 (360) 380-1618 [PST, GMT -8]

CT502 LANforge-FIRE Traffic Generator with 250 Virtual Interfaces

The CT502 is an excellent choice for testing firewalls, routers and other devices that pay attention to network flows. The CT502 uses the MAC-VLAN feature in the Candela Linux kernel to emulate up to 250 virtual interfaces using a single physical ethernet interface. Each of the virtual interfaces has it's own IP address, IP port space, MAC address and routing table. This allows one to configure all of the virtual interfaces on the same subnet, or different subnets, depending on the testing requirements. The CT502 1U rackmount chassis fits into a standard rack and is only 14 inches deep. It supports standard VGA, Keyboard, and Mouse interfaces for easy console/desktop access to the system. The rackmount chassis is relatively noisy, so it is better for a data center deployment than a desktop environment. Other form factors better suited for traveling or desktop use are also available at similar prices and performance. VoIP support and the Armageddon feature are priced separately. Please communicate your preferences to your sales representative. No additional hardware or software is required, but you may wish to manage the system using the LANforge-GUI on a separate machine.

NOTE: This product may have a different hardware configuration than the system pictured above.

Refer to your official quote for details.

Example Network Diagram

LANforge FIRE Virtual Interface Traffic Generator.

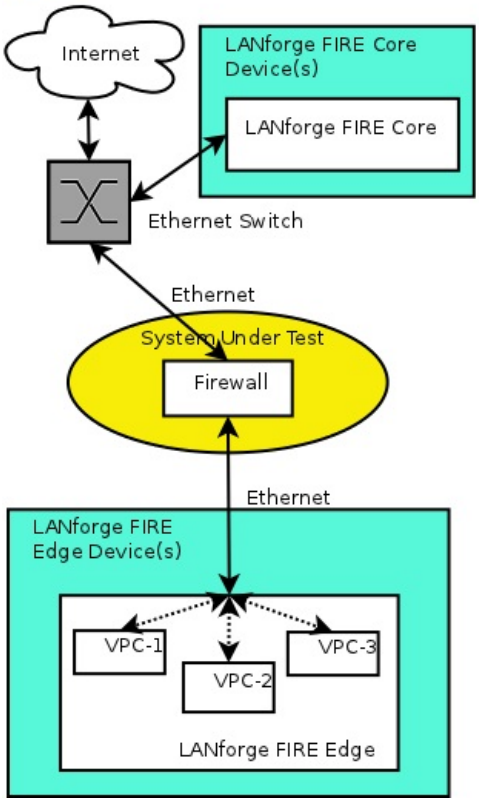

LANforge FIRE supports MAC-VLAN virtual interfaces. To the System Under Test, it appears as if there are multiple PCs sitting inside the LANforge system generating independent traffic streams.

More than 2000 virtual + physical interfaces are supported on high-end LANforge machines. LANforge can also send traffic from one physical interface on the local machine to another interface on that same machine. Each physical and virtual interface can be configured on the same, or on different IP subnets.

In the configuration on the left, the LANforge FIRE Core can be one physical interface and act as the server. The LANforge FIRE Edge can be a second physical interface with multiple virtual interfaces configured on it. Both interfaces can be on the same machine. It is also valid to use multiple LANforge machines on the edge and core for increased traffic generation capacity as well as physical network layout constraints.

Candela Technologies Inc., 2417 Main Street, Suite 201, P.O. Box 3285, Ferndale, WA 98248, USA
www.candelatech.com | sales@candelatech.com | +1 360 380 1618

Quick Start Guide

1. Connect Management ethernet port to Management network or management PC. If connecting directly to a PC, an ethernet cross-over cable should be used. Or, connect VGA, Keyboard, and Mouse to the chassis and manage it locally.
2. Connect one traffic generating port to the downstream side of the device under test. This usually is considered the 'client' side of the network and will host most of the virtual interfaces.
3. Connect second traffic generating port to the upstream side of the device under test. Virtual interfaces may also be added here in order to emulate multiple servers.
4. Connect power plug to a standard US or European AC power source.
5. If managing remotely, install the LANforge-GUI on a separate management PC or Laptop. Windows and Linux GUIs are supported: Select the correct one from the CDROM or Candela Technologies Download page and install it.
6. The CT502 should now boot. If DHCP is enabled on the Management network, the CT502 will automatically acquire an IP address. If DHCP is not available, the IP address will be set to 192.168.1.101 by the LANforge scripts.

7. Start the LANforge-GUI on the management PC, or the CT502 server if managing locally, and click the 'Discover' button. It should find the CT502 appliance and add the IP address to the drop-down box in the Connect widget. Press 'Connect' and you will be connected to the CT502.
8. Select the Layer 3, VOIP/RTP, Layer 4-7 and other LANforge-FIRE related tabs in the GUI to see existing traffic connections and to modify them or add new ones. You can also view a real-time report of the test with the 'Display' button for some traffic types. Any modifications take place immediately after you click 'Submit'.

LANforge-FIRE Related Screen Shots

Layer 3 (Ethernet, UDP, TCP) Connections

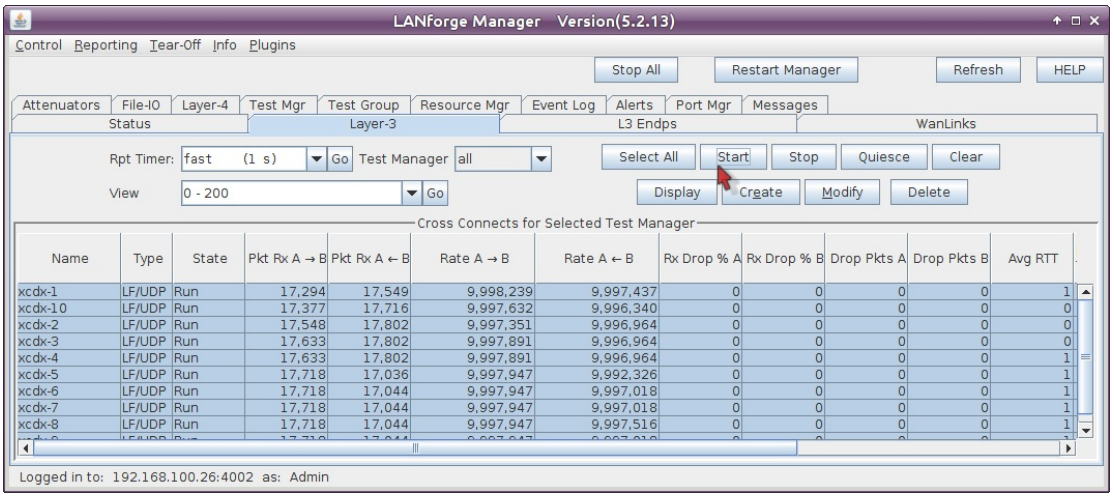

Layer 3 Create/Modify Screen

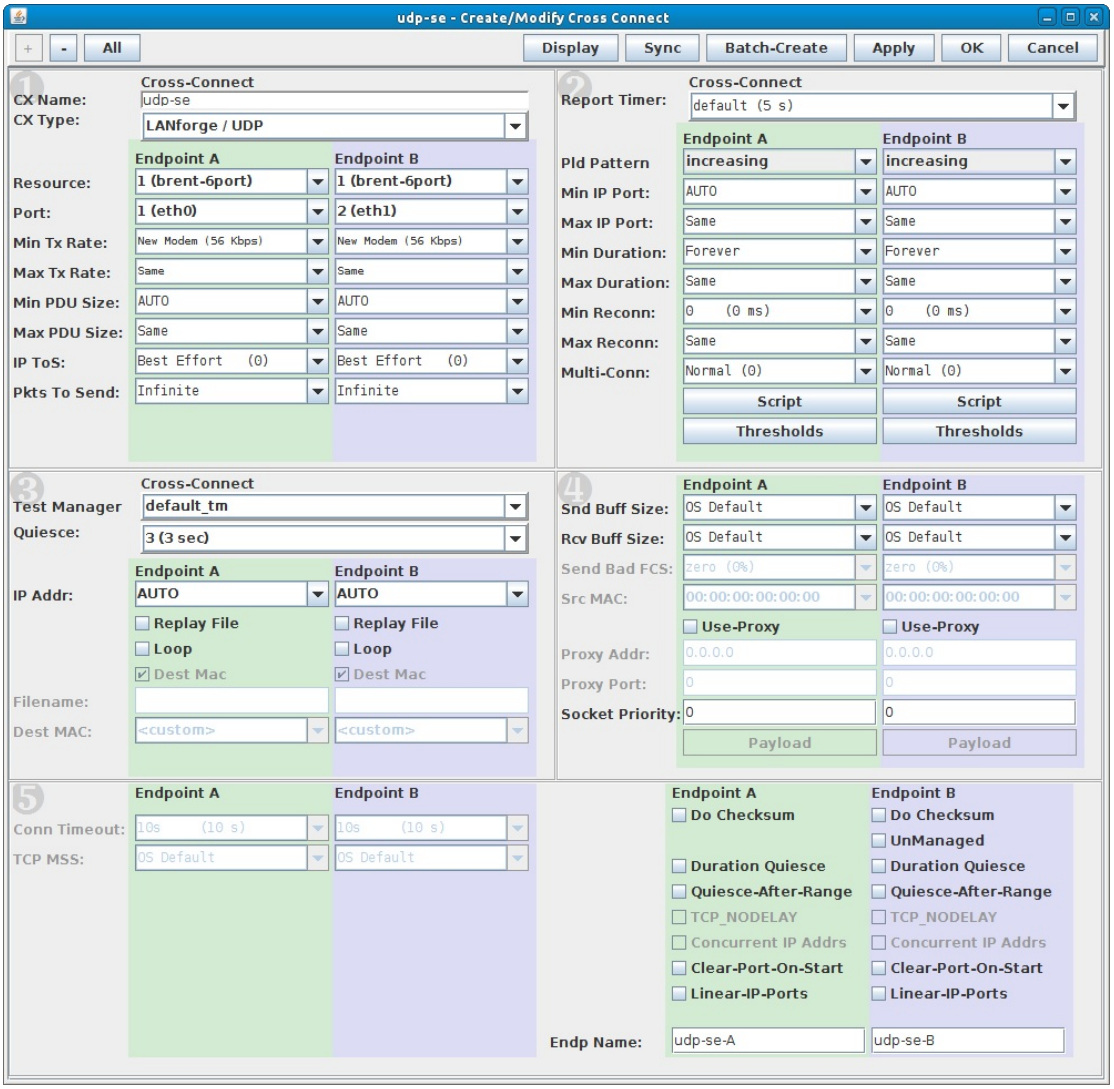

Candela Technologies Inc., 2417 Main Street, Suite 201, P.O. Box 3285, Ferndale, WA 98248, USA
www.candelatech.com | sales@candelatech.com | +1 360 380 1618

Software Features

1. Supports real-world protocols:
    1. Layer 2: Raw-Ethernet.
    2. 802.1Q VLANs.
    3. PPPoE: Integrated PPPoE support.
    4. Layer 3: IPv4, IPv6, UDP/IP, IGMP Multicast UDP, TCP/IP.
    5. Layer 4-7: FTP, HTTP, HTTPS, TFTP, SFTP, SCP
    6. Layer 4-7: TELNET, PING, DNS, SMTP, NMAP (via add-on script).
    7. File-IO: NFSv3, NFSv4, CIFS, iSCSI.
2. Supports up to 1000 concurrent TCP connections with base license package.
3. The CT502 is able to generate 500Mbps or more, depending on protocols mix and speed of the network under test. Supports at least 35 VoIP (SIP, RTP) calls if appropriate licenses are purchased. The portable chassis configurations may run at different speeds than the 1U rackmount systems.
4. Supports real-world compliance with ARP protocol.
5. Supports ToS (QoS) settings for TCP/IP and UDP/IP connections.
6. Uses publicly available Linux and Windows network stacks for increased standards compliance.

7. Utilizes libcurl for FTP, HTTP and HTTPS (SSL), TFTP and SCP protocols.
8. Supports file system test endpoints (NFS, CIFS, and iSCSI file systems, too!). File system mounts can use the virtual interface feature for advanced testing of file server applications.
9. Supports custom command-line programs, such as telnet, SMTP, and ping.
10. Comprehensive traffic reports include: Packet Transmit Rate, Packet Receive Rate, Packet Drop %, Transmit Bytes, Receive Bytes, Latency, Jitter, various Ethernet driver level counters, and much more.
11. Supports generation of reports that are ready to be imported into your favorite spread-sheet.
12. Allows packet sniffing and network protocol decoding with the integrated Wireshark protocol sniffer.
13. GUI runs as Java application on Linux, MAC and Microsoft Operating Systems (among others).
14. GUI can run remotely, even over low-bandwidth links to accommodate the needs of the users.
15. Central management application can manage multiple units, tests, and testers simultaneously.
16. Includes easy built-in scripting for iterating through rates and packet sizes, with automated reporting. Also supports scriptable command line interface (telnet) which can be used to automate test scenarios. Perl libraries and example scripts are provided!
17. Automatic discovery of LANforge data generators simplifies configuration of LANforge test equipment.
18. LANforge traffic generation/management software is supported on Linux and MS Windows.

Candela Technologies Inc., 2417 Main Street, Suite 201, P.O. Box 3285, Ferndale, WA 98248, USA
www.candelatech.com | sales@candelatech.com | +1 360 380 1618

Hardware Specification

1. Mid-Range 1U rackmount server.
2. Operating System: Fedora Linux with customized Linux kernel.
3. Up to 6 PCIe Intel Pro/1000 10/100/1000 Ethernet ports. Additional 10/100/1000 Ethernet interface for management.
4. High-availability Ethernet hardware bypass option available.
5. 2.8 GHz or higher Pentium processor.
6. One PCIe slot.
7. 1 GB or more RAM.
8. 40 GB or larger Hard Drive.
9. Solid State Drive option available.
10. Standard US or European power supply (automatically detects EU v/s US power).
11. Weight: 18 lbs or 8.2 kg.
12. Dimensions: 17 x 14 x 1.75 inches (14-inch deep 1U rackmount server) Metric: 432 x 356 x 44 mm.
13. ROHS compliant.

List Price: $9,300 List Price with 1 Year support (17%): $10,881

Additional Feature Upgrades

Unless otherwise noted in the product description, these features usually cost extra:

- WanPaths (LANforge-ICE feature set)
- Virtual Interfaces: MAC-VLANs, 802.1Q VLANs, WiFi stations, etc
- FIRE Connections: Base FIRE license includes 1000 active connections.
- LANforge-ICE Network Emulation.

- VOIP: Each concurrent call over the included package requires a license.
- VoIP-Mobile Audio Quality Testing using POLQA/PESQ.
- Mobile-Mobile Audio Quality Testing using POLQA/PESQ.
- Armageddon: Each pair of ports requires a license if not already included.
- RF Chambers for WiFi testing.
- External battery pack: 12+ hours for CT520, CT523, CT92X and other platforms.

Candela Technologies Inc., 2417 Main Street, Suite 201, P.O. Box 3285, Ferndale, WA 98248, USA
www.candelatech.com | sales@candelatech.com | +1 360 380 1618

Last modified: Tue May 6 21:30:44 PDT 2025